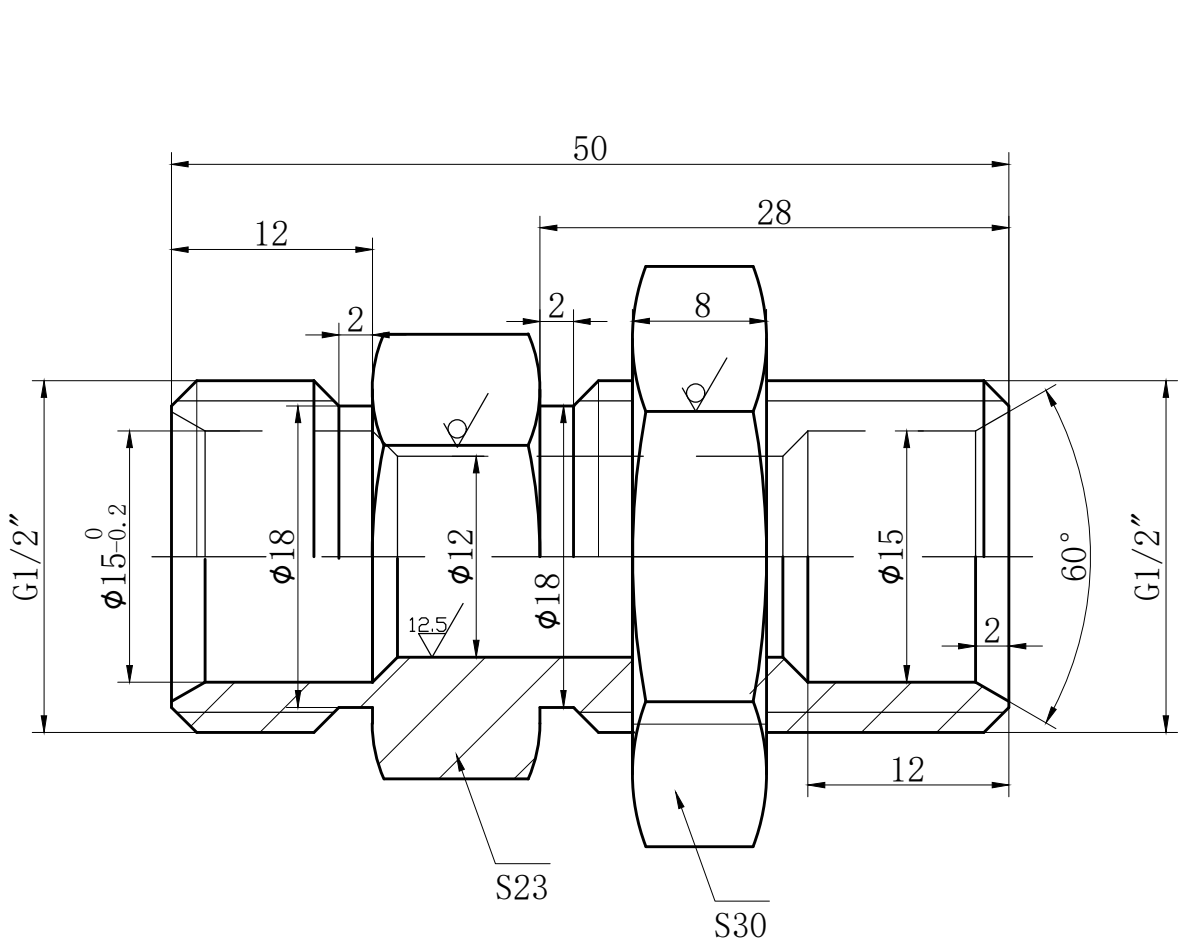

					Bulkhead unions 1/2″			
			MATERIAL	316				
			DATE	2022.11.17	QINGDAO MR METALS CO.,LTD			